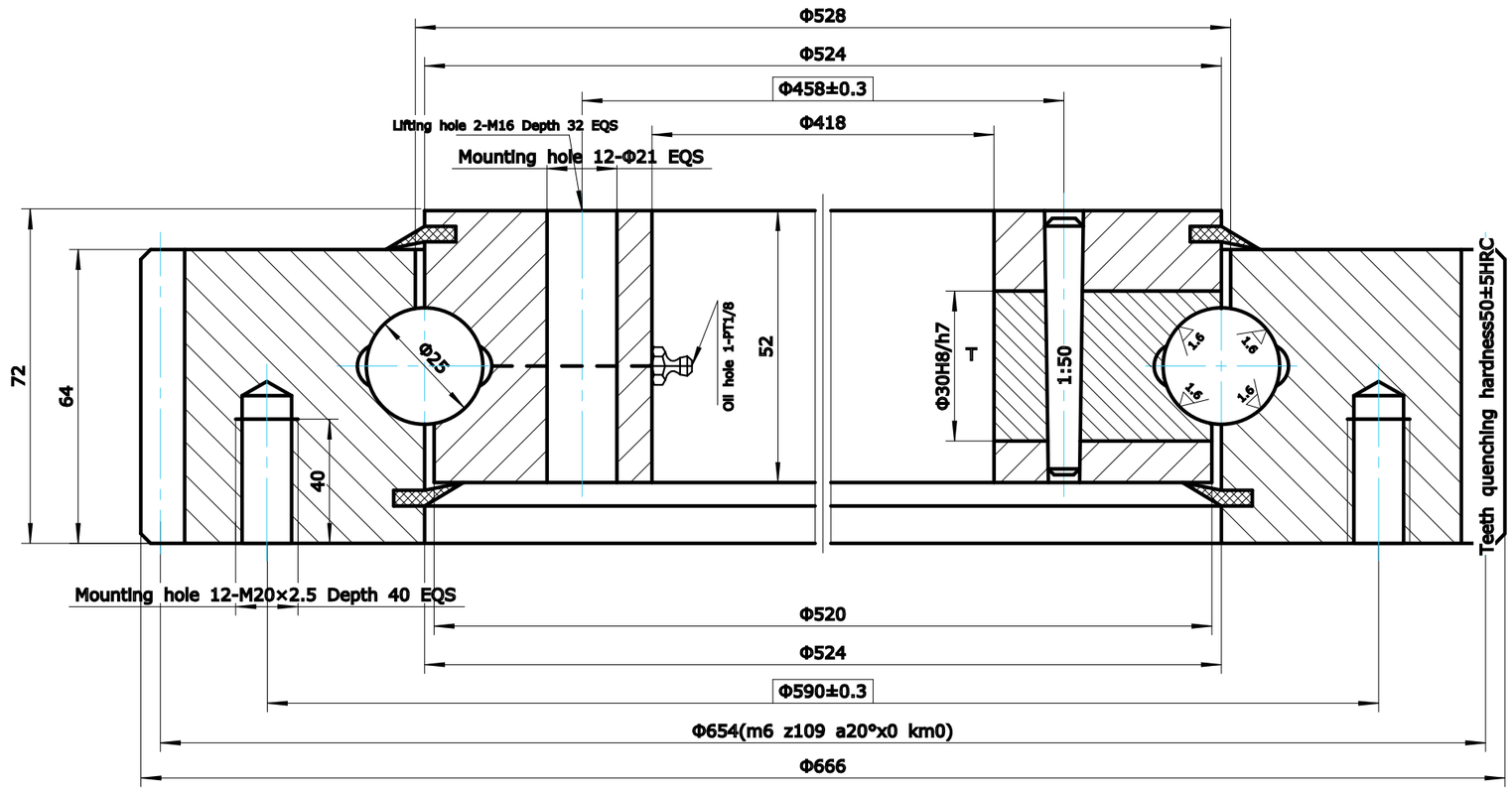

Module	m	6
Teeth no.	z	109
Teeth pressure angle	a	20°
Modification coefficients	x	0
Reduction coefficients	km	0
Precision(GB10095-88)		10
Average base tangent length and deviation	W	230.57 $^{-0.35}_{-0.60}$
Spanned tooth count.	k	13
Base tangent length change tolerances	Fw	0.125

Notes:

1、Unspecified chamfer: 1.5×45°
Through hole chamfer: 1.5×45°
Threaded hole chamfer: 3.0×45°
Edges chamfer

2、Raceway of inner &outer ring induction harden.
Depth:≥3.0mm
Hardness:55~62HRC

3、Inner & outer ring quenched & tempered,
Hardness: 207~262HB

4、Radial clearance: 0.05~0.25 mm
Axial clearance: 0.05~0.25 mm

5、Teeth quenching hardness50±5HRC

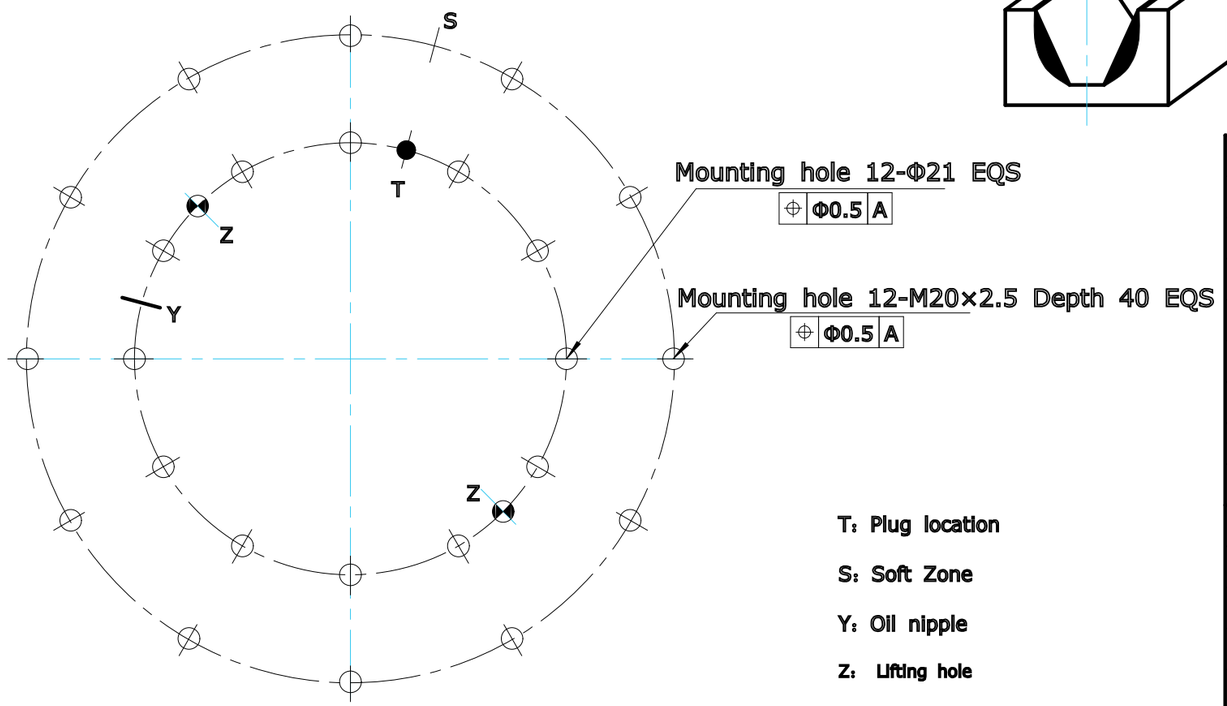

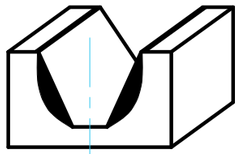

T: Plug location

S: Soft Zone

Y: Oil nipple

Z: Lifting hole

No.	Standard	Component	Material	Model	Qty	Remark
08	HG/T2811	Seals	NBRI-3	W17	2	
07	GB117-76	Pin	CN45	Φ8×50	1	
06		Plug	CN45	Φ30	1	
05	JB/T7940.7	Oil nipple	Component	PT 1/8	1	
04	GB/T699	Inner ring	50Mn		1	
03	GB/T308-2002	Ball	GCr15	25	55±1	
02	HG/T2349	Spacer	Nylon	D25	55±1	
01	GB/T699	Outer ring	50Mn		1	

				Model	CTRO-666	Drawing		Weight	90kg
				Name	011.25.524F	Qty		Scale	
				Material	50Mn	Total 1 page		The 1st page	
Design	WCZ	Standard		HAN JUNG ROBOT & BEARING CO.,LTD					
Check									
Process		Approve							
Date	2016.5.25								